DECK-MOUNTED BALANCED HEAD FAIRLEADERS

Smith Berger

600 SERIES

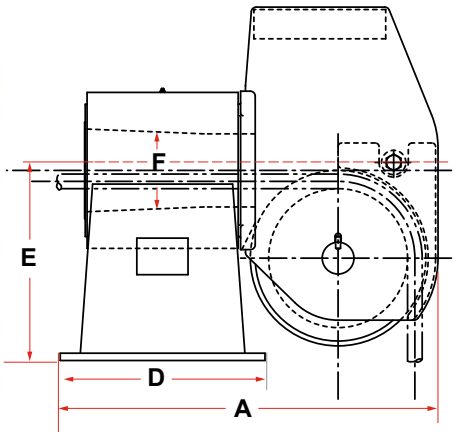

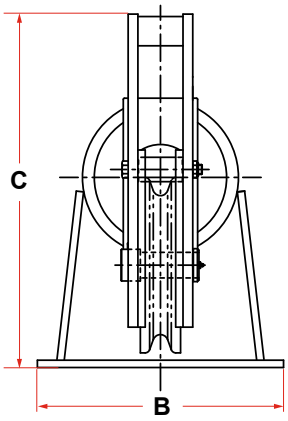

MODEL NO.	MAX WIRE SIZE	WIRE BREAKING STRENGTH (LBS)	SHEAVE THREAD DIA.	DIMENSIONS (INCHES)						WEIGHT (LBS)
				A	B	C	D	E	F	
MD-610	3/4	58800	8-1/4	23-11/16	16	20-1/8	14-3/4	11	4-1/2	270
MD-612	1	103400	9-3/4	28-3/16	19-1/4	24-5/8	17-3/4	13-1/2	5-5/8	495
MD-614	1-1/4	159800	11-1/4	30-9/16	20	28-1/8	18-1/2	15-1/2	6-5/16	670
MD-618	1-1/2	228000	14-1/4	38-1/8	25-1/4	36-1/4	21	19-1/2	8-1/2	1450
MD-622	1-3/4	266000	18-1/2	45-1/8	28-1/2	45-1/2	22	23-1/2	9-1/2	2100
MD-624	2	344000	20	50-1/8	30	44-13/16	27	25-1/2	12	2650
MD-630	2-1/4	494000	24-7/8	56-7/8	40-1/4	60-3/4	27-1/2	31-1/2	13	4800
MD-636	2-1/2	524000	30	63	40	70-1/4	27-1/2	36-1/4	14-1/2	6000
MD-652	3	818000	44	103-1/2	52-3/8	104	44	34-1/2	26-1/2	16500
MD-665	3	818000	55-1/2	115-5/8	52-3/8	117-1/2	44	34-1/2	26-1/2	18800

STANDARD FEATURES

- Designed for Breaking Strength of EIPS-IWRC Wire Rope with 90° Wrap on the Sheave and 180° Rotation of Swivelhead
- Cast Steel Sheave with Hardened Rope Groove for Longer Life
- Sealed Grease Lubricated Tapered Roller Bearings in Sheave and Swivelhead
- Weld Down Mounting Base
- Removable Guide Roller
- Epoxy Primer Coating

OPTIONAL FEATURES

- Customized Design to Suit Your Application
- Tail Sheaves / Tail Rollers
- Stainless Steel or Nylon Sheaves
- Bolt Down Mounting Base
- Load Monitoring System
- Three Coat Marine Paint System
- Third Party Certification

DECK-MOUNTED DOUBLE SHEAVE FAIRLEADERS

Smith Berger

2600 SERIES

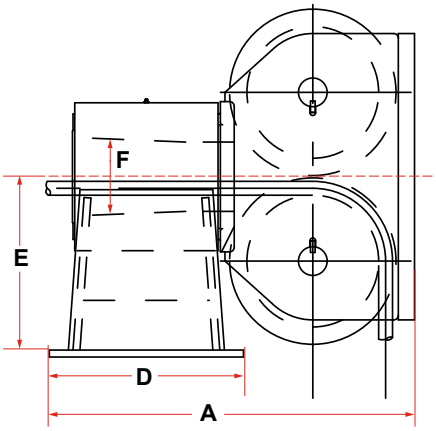

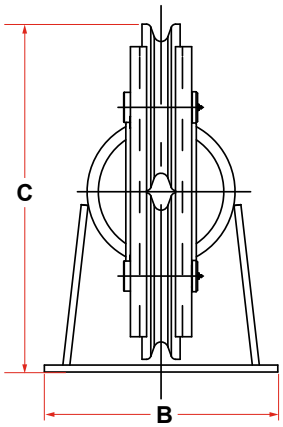

MODEL NO.	MAX WIRE SIZE	WIRE BREAKING STRENGTH (LBS)	SHEAVE THREAD DIA.	DIMENSIONS (INCHES)						WEIGHT (LBS)
				A	B	C	D	E	F	
MD-2610	3/4	58800	8-1/4	24-11/16	16	22	14-3/4	11	4-1/2	280
MD-2612	1	103400	9-3/4	29-13/16	19-1/4	25	17-3/4	13-1/2	5-5/8	520
MD-2614	1-1/4	159800	11-1/4	31-9/16	20	29	18-1/2	15-1/2	6-5/16	700
MD-2618	1-1/2	228000	14-1/4	39-1/8	25-1/4	37-5/8	21	19-1/2	8-1/2	1500
MD-2622	1-3/4	266000	18-1/2	46-1/8	28-1/2	48	22	23-1/2	9-1/2	2200
MD-2624	2	344000	20	51-1/8	30	49-5/8	27	25-1/2	12	2800
MD-2630	2-1/4	494000	24-7/8	57-7/8	40-1/4	61-5/8	27-1/2	31-1/2	13	5020
MD-2636	2-1/2	524000	30	64	40	72-5/8	27-1/2	36-1/4	14-1/2	6270
MD-2652	3	818000	44	104	52-3/8	105-5/8	44	34-1/2	26-1/2	17200
MD-2665	3	818000	55-1/2	117	52-3/8	130-5/8	44	34-1/2	26-1/2	19650

STANDARD FEATURES

- Designed for Breaking Strength of EIPS-IWRC Wire Rope with 90° Wrap on the Sheave and 180° Rotation of Swivelhead
- Cast Steel Sheaves with Hardened Rope Grooves for Longer Life
- Sealed Grease Lubricated Tapered Roller Bearings in Sheaves and Swivelhead
- Weld Down Mounting Base
- Removable Guide Roller
- Epoxy Primer Coating

OPTIONAL FEATURES

- Customized Design to Suit Your Application
- Tail Sheaves / Tail Rollers
- Stainless Steel or Nylon Sheaves
- Bolt Down Mounting Base
- Load Monitoring System
- Three Coat Marine Paint System
- Third Party Certification

IMPORTED DOUBLE SHEAVE BALANCED HEAD FAIRLEAD

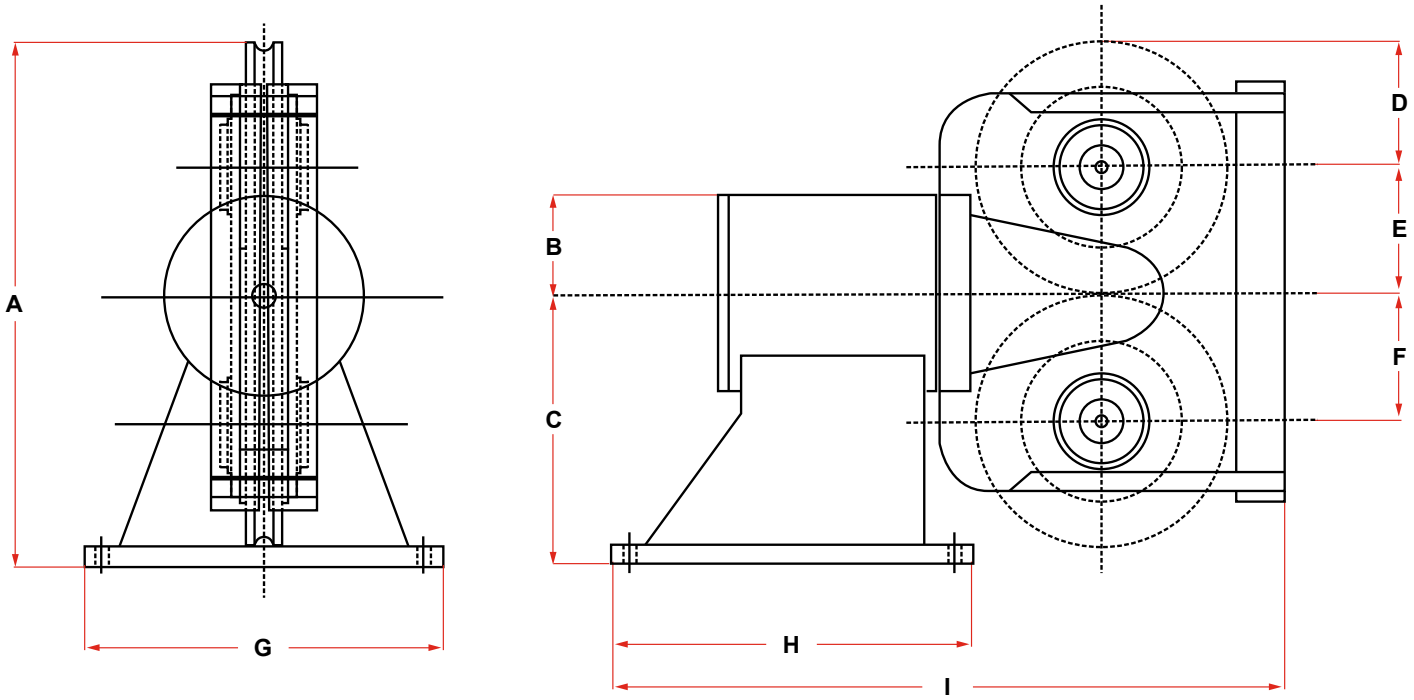

SIZE (IN)	DIMENSIONS (MM)									WEIGHT (KG)
	A	B	C	D	E	F	G	H	I	
1	531	100	275	127	129	129	365	365	679	195
1-1/4	667	127	365	150	152.5	152.5	660	508	920	495
1-1/2	867	178	459	205	205	205	760	760	1,280	1,080

PEDESTAL FAIRLEADERS

MODEL NO.	MAX WIRE SIZE	WIRE BREAKING STRENGTH (LBS)	DIMENSIONS (INCHES) A	B	C	D	E	WEIGHT (LBS)
PFH-10	3/4	58800	14	10	18	16	15	300
PFH-12	1	103400	16	12	20	16	16	350
PFH-14	1-3/8	192000	19	14	23	16-3/4	19-5/16	480
PFH-16	1-3/8	192000	20-1/2	16	24	18-1/4	19-13/16	600
PFH-18	1-1/2	288000	24	18	28	19	21	890
PFH-24	2	396000	30	24	36	27	24-1/2	1700

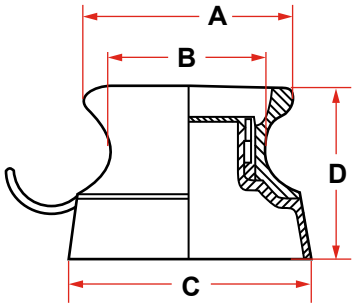

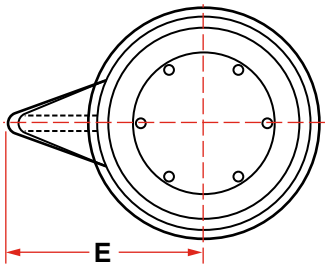

ROLLER FAIRLEADERS

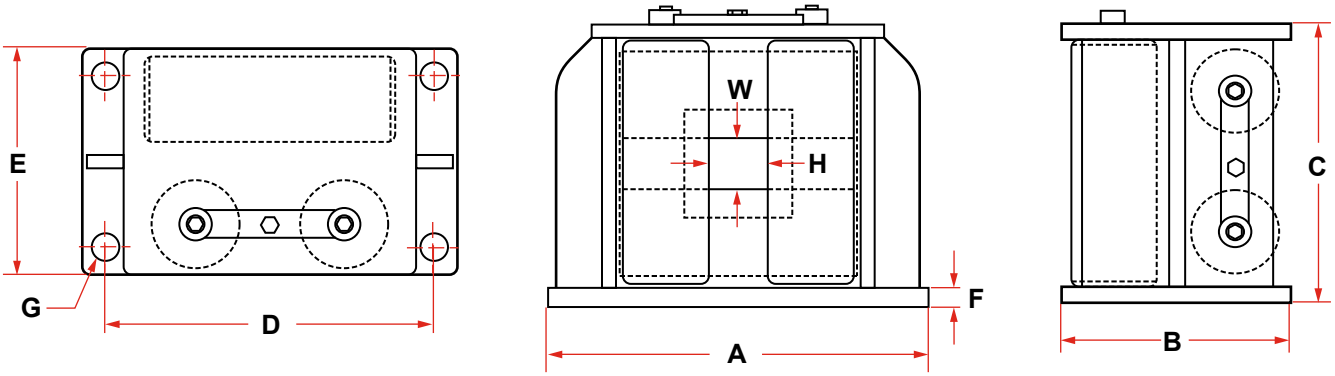

MODEL NO.	DIMENSIONS (INCHES) WIRE ROPER SIZE	VERTICAL ROLLER	HORIZONTAL ROLLER	OPENING W X H	A	B	C	D	E	F	G	ROLLER PIN	NO. BOLT HOLES	LBS.
RF-0	5/16 to 3/8	2.25 x 6.50	2.25 x 6.50	2.25 x 2.25	12.000	5.250	8.188	10.250	3.875	0.500	25/32	1.000	4	52
RF-1	1/2 to 7/8	4 x 11.375	4 x 11.375	2.75 x 2.75	17.500	10.500	13.125	15.000	8.000	0.750	1.063	1.375	4	235
RF-2	1 to 1-1/4	6 x 15.375	5.00 x 11.00	5.00 x 4.00	26.000	17.000	18.500	22.000	12.500	1.125	1.531	1.500	4	700
RF-3	1-3/4	8.00 x 22.50	8 x 22.50	6.5 x 6.5	36.750	23.000	27.125	31.000	8.000	1.500	1.813	3.000	6	2400

MODEL NO.	DIMENSIONS (MM) WIRE ROPER SIZE	VERTICAL ROLLER	HORIZONTAL ROLLER	OPENING W X H	A	B	C	D	E	F	G	ROLLER PIN	NO. BOLT HOLES	KGS
RF-0	8 to 10	57 x 165	57 x 165	57 x 57	305	133	208	260	98	13	20	25	4	24
RF-1	12 to 22	102 x 289	102 x 289	70 x 70	444	267	333	381	203	19	27	35	4	107
RF-2	25 to 32	152 x 391	127 x 279	127 x 102	660	432	470	559	318	29	39	38	4	318
RF-3	44	203 x 572	203 x 572	165 x 165	933	584	689	787	203	38	46	76	6	1089

Larger sizes available upon request.

4-ROLLER FAIRLEAD IMPORT (JIS F-2026)

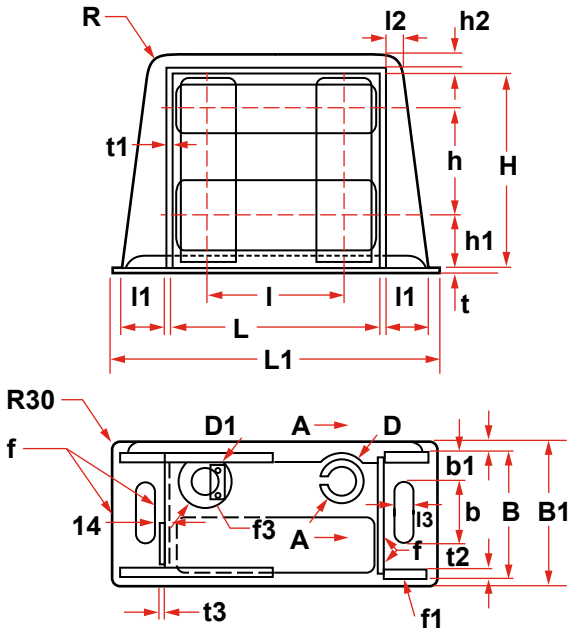

NOMINAL DIA.	FRAME																		SWL (TON)
	B	B1	B	B1	B2	D	D1	D2	D3	H	H	H1	H2	L	L1	l	l1	l2	
140	310	355	150	69	20	90	140	120	80	480	275	130	40	515	805	335	120	60	12
160	360	405	175	82	22	110	160	140	90	515	290	145	45	570	890	365	135	65	14
180	410	455	200	95	24	135	180	150	100	560	315	155	50	625	950	390	145	70	16
200	460	505	225	108	26	160	200	150	110	590	330	170	60	675	1049	420	160	80	25
250	565	510	280	133	30	200	250	200	130	715	415	195	75	820	1303	520	210	105	38
315	670	715	330	159	34	240	300	200	150	870	520	220	90	980	1562	520	260	130	45

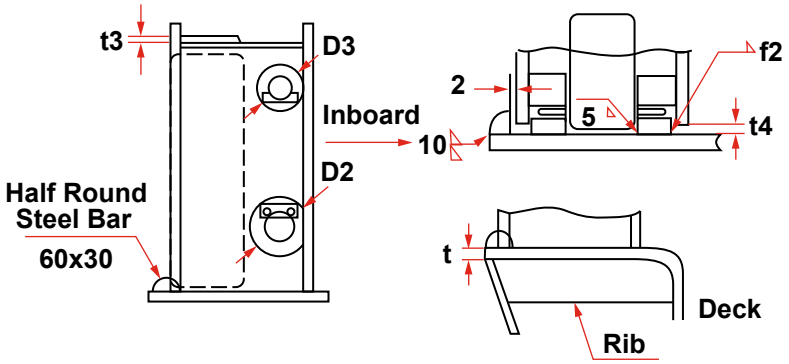

NOMINAL DIA.	FRAME							LEG OF WELD					WIRE ROPE DIA.	OPENING DIA.	REFERENCE MASS (KG)
	l3	l4	R	T	T1	T2	T3	F	F1	F2	F3	F4		LONG X WIDE	
140	50	20	40	12	10	16	6	20	9	6	12	4	18	145 x 195	187
160	50	20	45	14	10	18	9	22	9	7	12	6	22.4	150 x 220	277
180	50	20	50	16	10	20	10	24	9	9	12	8	25	150 x 199	387
200	50	20	60	18	12	22	10	26	10	10	14	8	28	152 x 204	510
250	50	25	75	20	14	26	12	30	10	12	14	10	35.5	199 x 253	900
315	50	25	90	22	16	30	14	34	12	14	16	10	42.5	253 x 302	1232

PEDESTAL ROLLER FAIRLEADS - TYPE EU

HEIGHT : H	800	1000	1200	1400			WALL THICKNESS
ROLLER DIA : D	A	A	A	A	B	C	
300	715	800	900	1000	25	440	12
350	800	825	950	1120	30	500	12
400	1000	1020	1020	1150	35	560	16
450	1020	1022	1120	1180	35	630	16
500	1020	1120	1180	1250	40	710	16
560	1120	1180	1250	1380	40	800	16

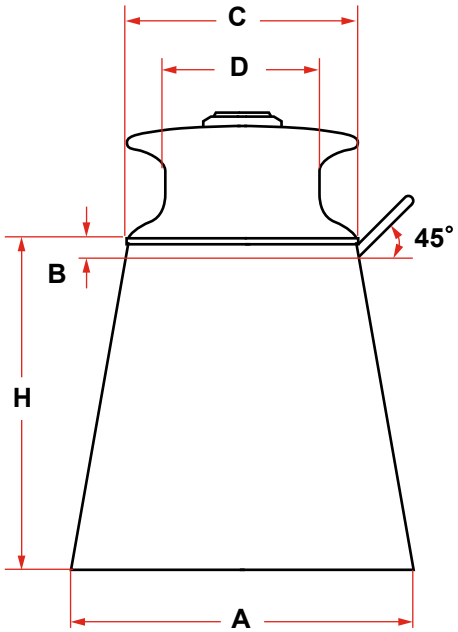

OTHER MODELS ROLLER BUTTONS

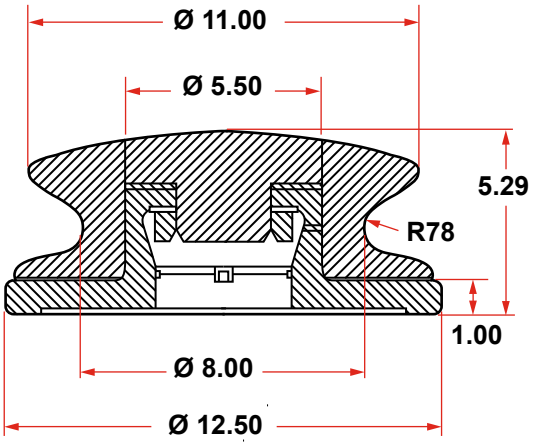

MODEL 50

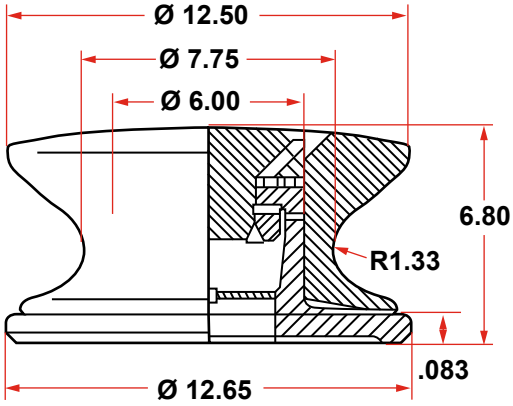

MODEL 75

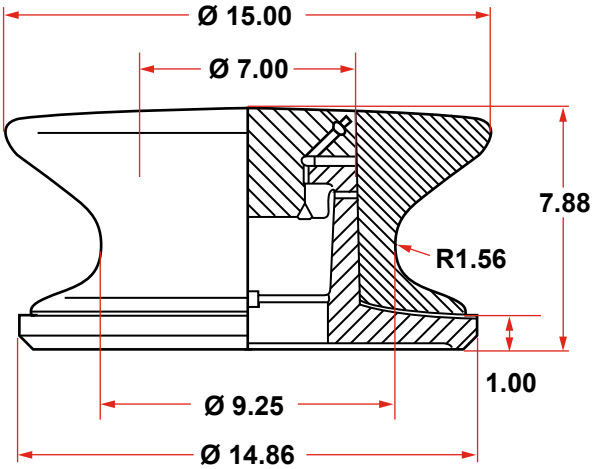

MODEL 100

ROLLER BUTTONS FREE ROLLING

These are the finest high-loaded carrying, free-rolling roller buttons that have ever been designed, and are manufactured in sizes to suit the needs of boats, seagoing tugs and ships. Precision machined parts have working parts coated with an extremely hard coating – 70 Rockwell C-Scale – which is corrosion resistant. The buttons will not freeze up as most do, because they are closed at the top. The air pocket formed on the inside, makes it practically impossible for water to enter the working parts. Before shipment, the roller buttons are completely lubricated and should need only occasional attention after installation and use.